ADJUSTABLE POCKET BLOW GUN

Features

- Transforms a coupler in an adjustable blow gun
- Regulation of air flow by a rotation of the tip
- Ergonomic design that fits operator's hand
- Maximum Inlet pressure 150 PSI

Part No.	Description
65.1016	Industrial 1/4" - Series 16
65.1017	Aro 1/4" - Series 17
65.1018	Tru-Flate 1/4" - Series 18
65.1019	Lincoln 1/4" - Series 19

SAFETY - BUTTON BLOW GUN

65.3010

Part No.	Description
65.3010	Blow gun with safety tip

Replacement tip

Part No.	Description
65.5110	Replacement safety tip

Features

- Meets OSHA with safety tip
- Button operated blow gun features a compact design and an economical alternative to lever operated and pistol grip types
- Distinctive black polyurethane epoxy finish
- Rugged construction makes it stand up to rough handling

Specifications

Maximum Working Pressure
150 PSI

Working Temperature
0°C to 80°C (32°F to 175°F)

Fitting
1/4" (F) NPT

Construction
Steel coated black polyurethane epoxy finish

STANDARD - BUTTON BLOW GUN

65.3210 65.3220

Features

- Full flow, non restricted
- Button operated blow gun features a compact design and an economical alternative to lever operated and pistol grip types
- Distinctive black polyurethane epoxy finish
- Rugged construction makes it stand up to rough handling

Part No.	Description
65.3200	Blow gun without tip
65.3210	Blow gun with standard tip
65.3220	Blow gun with rubber tip

WARNING

These button blow guns do not have a safety by-pass and must be used on air lines which have a pressure regulator set at a maximum of 30 PSI to conform to OSHA and other Safety Agencies requirements.

Specifications

Maximum Working Pressure
150 PSI

Working Temperature
0°C to 80°C (32°F to 175°F)

Air Inlet
1/4" (F) NPT

Construction
Steel coated black polyurethane epoxy finish

Replacement tip

Part No.	Description
65.5310	Standard tip
65.5320	Standard rubber tip

65.4915

-Plastic Air Inlet

-Brass Air Inlet

3 in 1 Air Blow Gun

- Air blow
- Tire inflator
- Safety nozzle

65.4919

-Plastic Air Inlet

-Brass Air Inlet

4" Adjustable Air Blow Gun

- Air blow
- With built-in air volume regulator to meet user's job requirements.

MULTIFLOW AIR AND FLUID GUN

Features

- Unmatched blowing force
- Adjustable flow control
- Adjustable bea
- The MultiFLOW meets and exceeds OSHA safety standards when dead-ended.

Part No.	Description
65.4960	MultiFLOW Air and fluid gun

Specifications

Material blowgun:
POM, TPE, Aluminium

Fluide
Air and non-explosive water based liquids

Seal Material
NBR (Nitrile)

Maximum Working Pressure
16 bar (230 PSI)

Minimum Burst Pressure
64 bar (930 PSI)

Temperature
-20°C — +80°C (-4°F — +176°F) 10 bar Working pressure
-20°C — +60°C (-4°F — +140°F) 16 bar Working pressure

Flow capacity is measured at 6 bar (87 PSI) inlet pressure

NEW

HIGH SAFETY Blow Guns

- The line of guns said to be safe is made to respect higher standards of health and security at the work place.
- These guns conform to OSHA standards (1910.242.B) or superior than these standards, by being equipped with an internal fail-safe pressure mechanism (low pressure), making residual pressure minute; leaving skin pores unaffected, if the tip is blocked.

HIGH SAFETY Blow Guns

Metallic tip

5 CFM

65.4810

- Fail-safe mechanism limits outlet pressure to a minute level in case of osbtruction in the tip
- Long, narrow tip allows user to reach hard to reach places.
- Brass connection 1/4" (F) NPT integrated into the body of the gun

Compound tip

7 CFM

65.4811

- Fail-safe mechanism limits outlet pressure to a minute level in case of osbtruction in the tip
- Non-scratch tip
- Brass connection 1/4" (F) NPT integrated into the body of the gun

Free Flow Blow Guns *(standard)*

OSHA Safety Guns *Compound Venturi tip*

7 CFM

65.4912

- Energy saving Venturi effect.
- Eliminates risk of injuries caused by air flow onto the user (embolism)
- Non-scratch tip
- Brass connection 1/4" (F) NPT integrated into the body of the gun

Protective screen compound tip

14 CFM

65 4914

- Conforms to safety standards
- Protective screen deflects dust and wood shaving blowback.
- Non-scratch tip
- Brass connection 1/4" (F) NPT integrated into the body of the gun

Noiseless tip

14 CFM

65.4917

- Conforms to safety standards with lateral air exit points when the tip is blocked
- Tip specially contrived to reduce noise level (max 77 dB) limiting the noise level in the work place, offering protection for the user's hearing
- Non-scratch tip
- Brass connection 1/4" (F) NPT integrated into the body of the gun

Metallic tip

14 CFM

65.4900

- Free, non-restricted air flow
- Metallic tip in galvanised steel allows easy access to hard to reach places.
- Brass connection 1/4" (F) NPT integrated into the body of the gun

Multi-purpose

9 CFM

65.4920

- Free, non-restricted air flow
- Multi-purpose gun equipped with a direct and concentrated air flow tip
- Non-scratch tip
- Brass connection 1/4" (F) NPT integrated into the body of the gun

Features

- High quality chrome plated casting
- All brass internal components assure rust free operation
- Self-lubricating O-rings prevent valve leakeage, and a gives precise air flow control
- Properly sized hook combines better finger protection and easy storage
- Large vinyl thumb grip provides additional user comfort
- Conform to OSHA standards for noise level (1910.95) and less than 30 PSI dead-ended pressure (1910.242B)

Specifications

Maximum Working Pressure
150 PSI

Working Temperature
0°C to 80°C (32°F to 175°F)

Fitting
1/4" (F) NPT

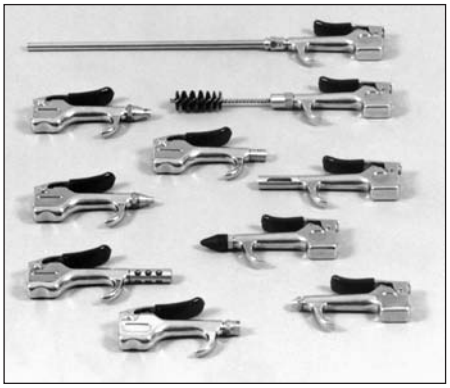

INFOMAX

Safety blow gun

"Safety" blow guns are engineered to meet OSHA and others Safety Agencies.

STANDARD BLOW GUN

Part No.	Description
65.5000	Standard blow gun*

*This blow gun can only be considered as a safety blow gun when it is properly fitted with a safety tip

THIS BLOW GUN IS NOT SAFETY

SAFETY BLOW GUN WITH BRASS TIP

Part No.	Description
65.5010	Blow gun with safety tip
65.5110	Standard safety tip

Applications

- Designed for maximum safety and efficiency, concentrated air stream is ideal for chip or foreign particle blow-offss

SAFETY AIR BOOSTER TIP BLOW GUN

Part No.	Description
65.5012	Gun with safety air booster tip
65.5112	Safety air booster tip

Applications

- Multiple venturi holes maximize air volume
- Conforming to OSHA standards

SAFETY SHIELD TIP BLOW GUN

Part No.	Description
65.5014	Gun with safety shield tip
65.5114	Safety shield tip

Applications

- Ideal for machinery, tools and equipments, to clean holes or other surfaces
- Substantially reduces dangerous chip and dust fly-back by providing an air shield around the main stream of air
- Brass design " venturi " tip

TAMPERPROOF SAFETY BLOW GUN

Applications

- General purpose safety gun for blowing away dust, metal chips or wood chips
- Tip permanently attached to the body

Part No.	Description
65.5016	Safety blow gun with tamperproof tip

CONCENTRATED AIR FLOW TIP BLOW GUN

Applications

- Brass tip design to concentrate air flow into a powerful stream while assuring a maximum safety to operator
- No through hole design to prevent dangerous pressure build up and reduce air turbulence

Part No.	Description
65.5018	Safety blow gun with concentrated air flow tip
65.5118	Concentrated air flow spare tip

SAFETY EXTENSION TIP BLOW GUN

Applications

- Ideal for blowing dust, metal chips, shavings in floor slot, to clean stonework structure, fuel and oil lines, ovens, and hard to reach areas

Part No.	Description	Spare Tips
65.5020	Gun with extension of 3"	65.5120
65.5021	Gun with extension of 6"	65.5121
65.5022	Gun with extension of 8"	65.5122
65.5023	Gun with extension of 10"	65.5123
65.5024	Gun with extension of 12"	65.5124
65.5025	Gun with extension of 16"	65.5125
65.5026	Gun with extension of 18"	65.5126
65.5027	Gun with extension of 24"	65.5127
65.5028	Gun with extension of 30"	65.5128
65.5029	Gun with extension of 36"	65.5129

SYPHON SPRAY TIP BLOW GUN

Applications

- Ideal for cleaning motors
- For spraying solvents, cleaners or mold releases
- Supplied with eight feet of polyvinyl tubing

Part No.	Description
65.5050	Gun with siphon spray tip and 8′ polyvinyl tube
65.5150	Siphon spray tip and 8′ polyvinyl tube

SAFETY FLEX TIP BLOW GUN 6" OR 12"

Applications

- Designed for easy access of hard-to-reach areas, such as motors and machinery.

Features

- These tips can be bent to any position and will retain given shape

Part No.	Description
65.5060	Gun with safety flex tip of 6"
65.5061	Gun with safety flex tip of 12"
65.5160	Safety flex tip of 6"
65.5161	Safety flex tip of 12"

FULL FLOW BLOW GUN

Part No.	Description
65.5000	Gun without tip
65.5210	Gun with standard brass tip
65.5220	Gun with standard rubber tip
65.5310	Standard brass tip
65.5320	Standard rubber tip

Features

- Full flow, non-restricted
- High quality chrome plated casting
- All brass internal components assure rust free operation
- Self-lubricating O-rings prevent valve leakeage and gives a precise air flow control
- Properly sized hook combines better finger protection and easy storage
- Large vinyl thumb grip provides additional user comfort

BRUSH TIP BLOW GUN (NYLON – STEEL – HORSEHAIR)

Part No.	Description
65.5245	Gun with nylon brush tip
65.5246	Gun with steel brush tip
65.5247	Gun with horsehair brush tip
65.5345	Nylon brush tip
65.5346	Steel brush tip
65.5347	Horsehair brush tip

Applications

- Ideal for cleaning machinery and motors
- Combines cleaning and blowing applications

Applications

- Used for getting into tight cavities, crevices and dies too narrow for other tips to reach

Features

- The needle portion is made from stainless steel and the nickel plated brass base with 1/8" MPT
- Will fit most standard blow guns

NEEDLE TIP BLOW GUN

Part No.	Dia.	Length	Description	Spare needle tips
65.5265	0.042"	15/16"	Gun and needle	65.5365
65.5266	0.050"	1-3/16"	Gun and needle	65.5366
65.5267	0.072"	1-3/4"	Gun and needle	65.5367
65.5268	0.095"	2-15/32"	Gun and needle	65.5368
65.5269	0.134"	2-3/4"	Gun and needle	65.5369

WARNING

These non-restricted blow guns have the same design and construction features as the Safety blow guns. However, these blow guns do not have a safety by-pass and must be used on air lines which have a pressure regulator set at a maximum of 30 PSI to conform to OSHA and other safety agencies requirements.

ASSORTMENT OF 5 NEEDLES

65.5370

ASSORTMENT OF 5 TIPS

65.5390

Safety Long Tip Blow Guns - Acetalyc Resin

SAFETY

BLUE

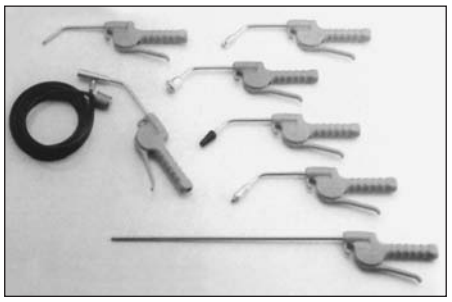

Features

- Meets OSHA requirements
- Acetalyc resin body that resists to water, oil, glue, grease, and any other fluids compatible to Buna-N oil seals
- Patented valve enables finely adjustable control of the air or fluid flow
- Available in many different safety tip versions
- Tough, light, ergonomic and easy maintenance
- Helps minimize Carpal Tunnel Syndrome
- Color : blue

Specifications

Maximum Working Pressure
150 PSI

Working Temperature
-20°C to 80°C (-4°F to 176°F)

Air Inlet
1/4" (F) NPT

INFOMAX

Safety blowgun

"Safety" blow guns are engineered to meet OSHA and other Safety Agencies.

SAFETY TIP GUN

Applications

- For professionnal use in industrial and automotive shops
- General purpose
- 5" long curved tip

Part No.	Description
65.7010	Gun with safety tip of 5"
65.7110	Safety curved tip of 5"

NEW

SAFETY AIR BLOW GUN 30 PSI

Applications

- For professionnal use in industrial and automotive shops
- Outlet pressure 30 psi
- Noise level 88/92 dB
- 5" long curved tip

Part No.	Description
65.7230	Gun with safety tip of 5"

WARNING

These non-restricted blow guns have the same design and construction features as the Safety blow guns. However, these blow guns do not have a safety by-pass and must be used on air lines which have a pressure regulator set at a maximum of 30 PSI to conform to OSHA and other safety agencies requirements.

Features

- Full flow, non restricted
- Acetalyc resin body that resists to water, oil, glue, grease, and any other fluids compatible to Buna-N oil seals
- Patented valve enables finely adjustable control of the air or fluid flow
- Helps minimize Carpal Tunnel Syndrome
- Tough, light, ergonomic and easy maintenance

Specifications

Maximum Working Pressure
150 PSI

Working Temperature
-20°C to 80°C (-4°F to 176°F)

Air Inlet
1/4" (F) NPT

STANDARD CURVED 5" TIP BLOW GUN

Applications

- For professionnal use in industrial and automotive shops

Part No.	Description
65.7200	Curved 5" tip gun

CONICAL RUBBER TIP BLOW GUN

Applications

- Industrial and automotive, for blowing out blocked passages such as automatic transmissions and carburators
- For delicate surface applications and suitable for woodwork
- Full flow, non-restricted
- Anti-scratch tip

Part No.	Description
65.7220	Gun with black PVC tip
65.7320	Black PVC tip

STRAIGHT 12" LONG TIP BLOW GUN

Applications

- Delivers air supply to hard to reach points
- Full flow, non-restricted

Part No.	Description
65.7225	Gun with 12" long tip

SIPHON TIP BLOW GUN

Applications

- For professional use, liquid atomizing gun for washing, degreasing and lubricating with naphtha and diesel
- Full flow, non-restricted
- Flexible 40" siphon tube with solid filter fixed to the suction fitting for immersion directly in the liquid to be atomized

Part No.	Description
65.7250	Siphon tip gun with 40" tube

65.7350

GREEN

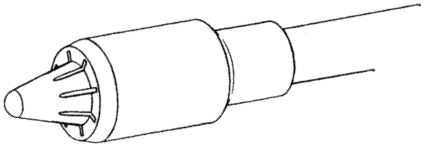

SAFETY QUIET TIP

ERGONOMIC AND QUIET ONLY 80 dBA AT 85 PSI

Part No.	Description
65.7514	Safety silent blow gun

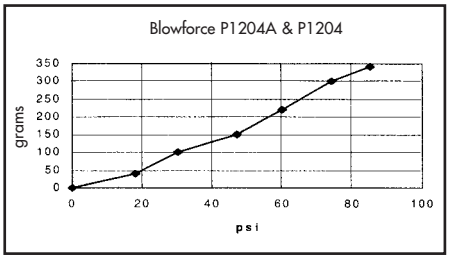

Features

- Conforms to OSHA requirements
- 10 % more volume and 97% of the blowforce of our standard open full flow blow guns
- Quiet, unique nozzle design helps protect against hearing loss. Only 80 dBA at 85 PSI
- Modulating valve-trigger lets you use only the air flow required
- Insulated Delrin. Prevents cold hands and sore wrists. Strong, light and easy to handle

Specifications

Maximum Working Pressure
150 PSI

Air Consumption
16.7 SCFM

Noise level
80 dBA à 85 PSI

Working Temperature
-20°F to 175°F (-30°C to 80°C)

Air Inlet
1/4" (F) NPT

Construction
Body : Delrin green nylon
Tube : Nickel plated steel
Seals : Nitrile (Buna N)
Mechanism :Brass, Stainless Steel

A WISE CHOICE

OSHA Compliant Only One Gun Combines ...

Amazing Power
- Compare. 10 % more volume and 97% of the blowforce of our standard open full flow blow guns.
- Superior performance for cleaning, cooling and drying.

Whisper Quiet
- Unique nozzle design helps protect against hearing loss.
- Reduces cost of noise accumulation in many workplaces
- Only 80 dBA at 85 PSI

Precision Control
- Impressive modulating valve-trigger lets you use only the air you need

Ergonomic and Rugged
- Insulated Delrin body.
- Prevents cold hands and sore wrists.
- Strong, light and easy to handle
- Guaranteed

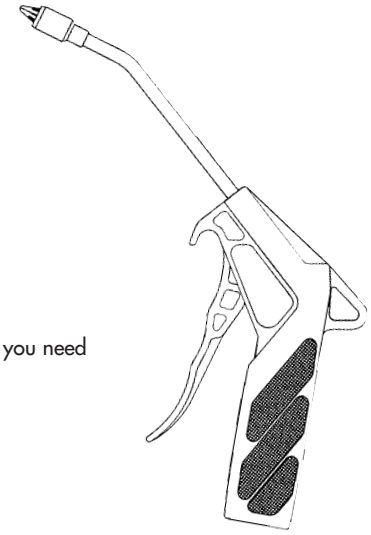

NEW

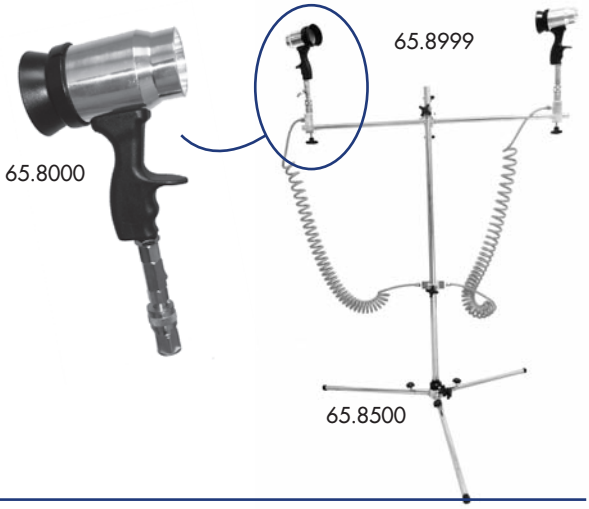

Part No.	Description
65.8000	Paint Dryer Blow Gun
65.8500	Stand
65.8999	Paint Dryer Kit